Elkhart Historic & Cultural
Preservation Commission

ELKHART HISTORIC & CULTURAL PRESERVATION COMMISSION
REGULAR MEETING
THURSDAY, NOVEMBER 19, 2026

6:00 P.M. **Council Chambers – 2nd Floor**

AGENDA

1) CALL TO ORDER
2) ROLL CALL
3) APPROVAL OF AGENDA
4) APPROVAL OF MINUTES - SEPTEMBER 10, 2026
5) HEARING OF VISITORS
6) OLD BUSINESS
   A. NEIGHBORHOOD UPDATE/PROGRESS REVIEW/NOMINATIONS
7) NEW BUSINESS
   A. APPROVAL OF 2027 MEETING CALENDAR
   B. 26-COA-12, 515 EAST STREET – INTERPRETIVE SIGN
8) STAFF ITEMS
   A. 26-COA-11, 102 WEST BEARDSLEY AVENUE – ARCHED WOODEN WINDOW TRELLISES
9) ANNOUNCEMENTS
10) ADJOURNMENT

If you are unable to attend, please contact Wendy Sonora at 574-294-5471 x 3256

Teams Information

https://teams.microsoft.com/meet/2238702867242328?p=Fof7JuQqLDVLsHziCr

Meeting ID: 223 870 286 724 232 8

Password: s4uJ2yE3

HISTORIC & CULTURAL PRESERVATION COMMISSION MEMBERS

Name	Term	Appointed By
William (Bill) Zimmerman, Chair	September 15, 2025 – December 31, 2026	Mayor
Doug Mulvaney, Vice Chair	January 1, 2026 – December 31, 2027	City Council (Citizen)
J.A. Whitmer, Treasurer	September 16, 2025 – December 31, 2027	Mayor
Robert (Bobby) Glassburn	September 15, 2025 – December 31, 2028	Mayor
David Henke		City Council (Member)
Vacant		Mayor

City of Elkhart
Municipal Building
229 South Second Street
Elkhart, Indiana 46516
574.294.5471 Ext. 1018

Elkhart Historic & Cultural Preservation Commission

Special Meeting Thursday, September 10, 2026

Call to Order:

Bill Zimmerman called to order the Elkhart Historic & Cultural Preservation Commission Special Meeting for Thursday, September 10, 2026, at 5:00 pm.

Roll Call:

Present: JA Whitmer, Bill Zimmerman, Doug Mulvaney, Carrie Brunson. Kyle Anthony-Petter with the City of Elkhart and Deb Parcell from Indiana Landmarks.

Absent: Bobby Glassburn

Approval of Agenda:

Zimmerman asked for a motion to approve the agenda as presented. Motion made by Doug Mulvaney, seconded by JA Whitmer; motion carried with the following roll call vote:

JA Whitmer - Yes
Bill Zimmerman – Yes
Doug Mulvaney – Yes
Carrie Brunson – Yes

Approval of Minutes:

Zimmerman noted that the packet included one correction to the May 21, 2026, minutes. The minutes originally stated that Bill Zimmerman called that meeting to order, but he was absent. The minutes were corrected to show that Doug Mulvaney called the meeting to order.

Zimmerman said that he would accept a motion to approve the corrected minutes from May 21, 2026. Motion made by JA Whitmer, seconded by Carrie Brunson; motion carried with the following roll call vote:

Whitmer - Yes
Zimmerman – Yes
Mulvaney – Yes
Brunson – Yes

Hearing of Visitors: NA

Old Business:

Zimmerman asked staff if there were any old business, neighborhood update, progress review, or nominations.

Kyle Anthony-Petter, planner II staff member for the commission, said there is none.

New Business:

DRAFT

A: 26-COA-09, 515 East Street – Non-lit Fabricated Letters

Anthony-Petter read staff report: Install non-illuminated stud-mounted 3in deep fastened black aluminum lettering wall sign on the north elevation between the second and third story.

Zimmerman asked the commission members if they had any questions for Anthony-Petter. Whitmer asked if there was a report.

Kyle read report:

Applicable Guidelines:

Commercial Standards: Signs: Add a New Sign to Replace a sign or where no signage exists.
• New signs should be in proportion and be similar in color and details of the building.
• Signage should not cover nor remove elements of the building that give it its character.
• Signs designed in the same period as the building's construction are recommended – allowing the use of modern materials for their fabrication.
• New signs should be installed with anchoring that does not destroy or cause removal of historic materials.

Staff Analysis
The petitioner is requesting to install a non-illuminated stud-mounted 3in deep fastened black aluminum lettering wall sign on the north elevation between the second and third story.

This petition is in part of a larger request in completing the residential building project which came in front of the commission in 2024 as 24-COA-01. The request is to provide signage of the address for the building in larger lettering than typical.

The petitioner recently reached out staff to talk about the requirement for signage for this property and was made aware of the need for approval from the Commission before permits.

The proposed sign area will be placed on the brick wall with the lettering of the sign to be located in the corner of the building between the second and third floors. This request for the property reflects the petitioners wanting to add a way to better identify its location. With this building being new construction, the typical worry of damaging the historic material is not a concern.

Recommendations
The Staff recommends approval of the request based on the following findings of fact:

1. The proposed sign should be in proportion and be similar in color and details of the building.
2. The proposed sign will not cover nor remove elements of the building that give it its character.
3. The proposed sign will be installed with anchoring that does not destroy or cause removal of historic materials.
4. The proposed color, graphics, and scale is compatible with the district and its character.

Zimmerman asked the commission members if there were any questions for staff. No one had questions.

DRAFT

Zimmerman said that he would accept a motion to approve 26-COA-09, as presented. Motion made by Whitmer, seconded by Mulvaney; motion carried with the following roll call vote:

Whitmer - Yes
Zimmerman – Yes
Mulvaney – Yes
Brunson – Yes

B: 26-COA-10, 301 Division Street – New Shed

Anthony-Petter read staff report:

Description of work:

1. Install a new 24ft long by 10ft wide by 8ft high wood framed shed in the rear yard.
2. The siding will be 36" x 16" Charcoal Gray Pro-Rib Steel Panel.
3. Use Owens Corning TruDefinition Architectural Shingles in Sierra Gray.

Applicable Guidelines:

Residential Standards: Site Project: Garages, Landscaping, Parking Area, Decks, Driveways, Sidewalks and Paths: Construct a new Garage: New Construction

- **Setbacks and Site Parameters**. Specific features that should be used in defining physical context include: building age, style, design character, materials, the entries, and the placement of accessory structures. Reflect the traditional setbacks seen within the block.
- **Massing and Scale**. Establish a sense of human scale in building design.
- **Architectural Character.** Design a new building to reflect its time, while respecting key features of its context.
- **Materials.** Use materials that match the historic building in look and detailing.

Staff Analysis

The petitioner is requesting to install a new 24ft long by 10ft wide by 8ft tall shed in their rear yard. The shed will use Owens Corning TruDefinition Architectural Shingles in Sierra Gray. The siding for the shed will be 36" x 16" Charcoal Gray Pro-Rib Steel Panel.

This petition comes in response to the petitioner starting construction on a shed and stopping following being made aware that approvals were needed before work could be completed. The petitioner recently reached out to staff following being made aware of needing a permit and approval by the Commission to complete the shed which had been started. The petitioner then submitted a COA a few days later.

When a new garage or shed is proposed to be constructed the design guidelines makes reference to following the new construction guidelines. Due to the current state of the shed, which is about 75% complete the framing and general shape is known. As a part of the submitted documents no elevations were given showing the location of doors or windows when complete. Anthony-Petter said that it is still a question that needs to be addressed.

DRAFT

New construction should differentiate new work from the existing historic architecture and design but should be compatible with existing massing, size, scale and architectural features to protect the historic integrity of the district. The height of a new structure and its height to width proportions should be consistent with adjacent buildings in the district. Building materials used on a new structure should be compatible in scale, texture and color with adjacent structures.

Materials should appear similar in scale, proportion, texture, and finish with traditional building types. Material should match the historic building in look and detail. The use of pre-approved materials for siding and trim would be recommended to better fit with the district. The vertical metal siding does not match existing siding on the house or in the district and should be horizontal. No example of the use of metal siding on sheds or houses in the district could be found that matches the proposed siding.

The proposed roofing material is an approved material and will fit with the district and the house. The placement and location will match existing sheds and garages in the district along alleys. A portion of the shed will be visible from the street (Division Street) but will be most visible from the alley.

Staff appreciates the petitioner wanting to make improvements to their property, but following the existing process is necessary to ensure compliance with the Commission and the City.

Recommendations

The Staff recommends approval of the shed based on the following findings of fact:

1. The proposed shed meets the setback of the area which reflects the traditional setbacks within the block.
2. The proposed shed will fit the scale of the other shed in the district.
3. The roof form will be like those historically found in the District.

The Staff recommends approval of the roof material based on the following findings of fact:

1. The proposed roof will be similar in color and material to the house.
2. As the roof is new, the installation will not destroy or cause removal of historic materials.
3. The proposed roof shingle is similar to other roofs and meets historic district guidelines for material and profile.

The Staff recommends denial of the siding material based on the following findings of fact:

1. The proposed siding material would not match the historic buildings in the area in look and detailing.
2. Other siding material from the pre-approved materials list or other alternative materials could be used.
3. The proposed siding material is not similar scale, proportion, texture, and finishes with those used traditionally on this building type.

Anthony-Petter said that staff is recommending to approve the first two and deny the last one and have the applicant work with staff or approve it or approve the last one, but applicant work with staff to have a material that staff feels comfortable with to make sure it is horizontal as well as finding a material that will fit better with the neighborhood. Anthony-Petter added that they do not

DRAFT

know if the structure will have doors or windows. Anthony-Petter said that those questions still needed to be answer, and the applicant was present to answer any questions.

Zimmerman asked the applicant to come up to podium and to state his name and address.

Applicant introduced himself as Juan Macias. Zimmerman asked commission members if they had any questions to the applicant.

Whitmer asked Mr. Macias if he had anything to say to the commission in support of his project. Ian Irizarry helped applicant to translate from English to Spanish, and applicant did not have any questions.

Whitmer said that there was no indication of windows or doors for the shed and asked the applicant to describe where those were going to be place. Irizarry translated that he does not have anything for windows, but for doors yes. Whitmer wanted confirmation that the shed would have no windows. Irizarry translated and confirmed that there were not windows. Whitmer asked how many doors, and where will they be placed. Irizarry translated and confirmed that there will be only one door facing his property. Whitmer asked if this would be a garage door or a regular sized door. Irizarry translated and confirmed that it would be a regular door. Whitmer asked if that would give the applicant adequate access to the shed. Applicant responded yes. The applicant said that he wanted to answer what he could. Mr. Macias stated that the shed is not big and described it as twelve by ten. The size made him think that he does not need windows or a big door since he would like to use it for his tools. Whitmer wanted confirmation if he was going to use it for storage of his tools. Mr. Macias said Yes that is what I have to use it for.

Whitmer said that nothing of what she had heard so far would impact the recommendation on approval of building the shed itself and she did not have a problem with the roof. The commission has a problem with the proposed covering of the side. Whitmer asked if Mr. Macias understood that metal was not an approved covering. Mr. Macias responded that he understood, but he said that the siding on his house is really old and cannot have the same one on the shed. Whitmer said that she understood that and added that there was a list of approved sidings and he could work with staff to choose one that could be on their approved list. Whitmer asked if he would be willing to work with staff. Mr. Macias asked if he cannot use metal siding. Zimmerman confirmed that he cannot use metal siding and added that the siding has to be an approve material other than metal and the direction of the material has to be horizontal not vertical to match. Zimmerman repeated that there were two issues with that: The material and the direction of the siding. Zimmerman continued that those issues needed to be addressed before they could move on. Zimmerman asked again if the applicant was willing to make those changes according to Whitmer's question. Mr. Macias asked if he had more options. Whitmer asked Anthony-Petter if he could give the applicant samples of approved materials. Whitmer suggested that wood siding would be one, but she does not think that it will be practical. Anthony-Petter said that an LP siding, and that the staff was looking for something that would have a little bit of an overlay that creates a lapping and looks like some kind of flapping. Whitmer asked if this would be horizontal and not made of metal. Mr. Macias asked if that could be vinyl. Whitmer asked if vinyl was on the approved list. Anthony-Petter responded no it is not and added that since it is a new building that opened up the opportunity for materials that are historic in nature, but what staff cared more about was making sure it has a

DRAFT

profile that would fit with the neighborhood. Whitmer asked Anthony-Petter if he could work with Mr. Macias to arrive at an acceptable covering. Anthony-Petter said that he could provide the applicant with a list and photos of approved materials that would fit. Whitmer asked Mr. Macias if he was willing to work with staff to choose another covering. Mr. Macias agreed. Whitmer said that would resolve her questions about it. Zimmerman said that not only the covering material, but the direction. Whitmer added that if the applicant worked with Anthony-Petter, it would make it so that it fits within the historic guidelines to the extent possible, even though it is new construction it will have a little bit of an older look to keep it with the neighborhood. Whitmer thanked the applicant for his cooperation in doing that.

Zimmerman asked if applicant was willing to work with Anthony-Petter and staff to make the correct material and direction of the material for the shed.

Whitmer asked Anthony-Petter if he would, on the third issue, prefer approving it subject to working with staff or how does he want the board to handle it because she did not want the applicant to be back another time. Anthony-Petter said approving it with the condition that the applicant will work with staff to come up with an acceptable material and to make sure that the three motions are separate.

Zimmerman asked for the following three motions for 26-COA-10 231 Division Street, for three sections: 1. Approval of the shed 2. Approval of the roofing material 3. Approval of the siding with the condition that applicant works with staff for the proper material and direction Anthony-Petter instructed to include the COA number and the address. Zimmerman asked if those three needed to be separately or included in it all. Anthony-Petter confirmed that it needed it to be separated.

Zimmerman asked for a motion to approve 26-COA-10 231 Division Street, in reference to the construction of the shed on the property. Motion made by Whitmer, seconded by Doug; motion carried with the following roll call vote:

Whitmer - Yes
Zimmerman – Yes
Mulvaney – Yes
Brunson – Yes

Zimmerman asked for a motion to approve 26-COA-10 231 Division Street, for approval of the roofing material. Motion made by Brunson, seconded by Whitmer; motion carried with the following roll call vote:

Whitmer - Yes
Zimmerman – Yes
Mulvaney – Yes
Brunson – Yes

Zimmerman asked for a motion to approve 26-COA-10 231 Division Street, for approval of the siding material assuming that applicant will work with staff on the material and the direction of

the siding. Whitmer said she would move by changing the wording to assuming to conditioned on working with staff.

Zimmerman asked for a motion to approve 26-COA 231 Division Street, for approval of the siding with the condition to work with staff for those two areas: material and direction of the siding. Motion made by Whitmer, seconded by Doug; motion carried with the following roll call vote:

Whitmer - Yes
Zimmerman – Yes
Mulvaney – Yes
Brunson – Yes

Staff Items:

A. 26-COA-05: 931 West Franklin Street – Fence Replacement

Anthony-Petter asked the commission if they wanted him to read the full staff report. Doug suggested to incorporate the reports by reference it, like previous time. Whitmer suggested reading the recommendation part aloud.

Anthony-Petter read:

Description of proposed project:

1. Remove and replace existing 6-foot-tall wood fence and install 6-foot-tall wooden fence in the rear yard.

Anthony-Petter said that it was approved as it matched what the guidelines say in regard to replacing like for like.

Anthony-Petter read:
Recommendation
The Staff recommends **approval** of the request based on the following findings of fact:

1. The proposed fence comes from the pre-approved designs and material list.
2. The proposed fence will match the existing fence in height, installation, material, and design.
3. The proposed fence is in the rear yard, minimally visible from the street.
4. It meets historic district guidelines for size, location, material, and design, and can be approved by staff.

Zimmerman asked if there were any questions from staff. There were no questions.

Zimmerman said that he would accept a motion to approve 26-COA-05 931 West Franklin Street, as presented. Motion made by Whitmer, seconded by Brunson; motion carried with the following roll call vote:

Whitmer - Yes

DRAFT

Zimmerman – Yes
Mulvaney – Yes
Brunson – Yes

B. 26-COA-06: 234-236 Division Street – Concrete Pad

Anthony-Petter read Staff Report:

Description of proposed project:

1. To install a new 3ft by 13 ft long sidewalk along fence line in the front yard.
2. Install a 10ft wide by 15ft long concrete pad in the front yard along the sidewalk.

Recommendation
The Staff recommends **approval** of the request based on the following findings of fact:

1. The proposed driveway will be paving a part of an existing gravel driveway.
2. The proposed fence will match the existing fence.

Anthony-Petter said that there would be a little bit of changes and read:

2. The proposed sidewalk will match the existing sidewalk in installation material and design.
3. The proposed sidewalk will be on the side yard and will be minimally visible from the street.
4. It meets historic district guidelines for location, material, and configuration, and can be approved by staff.

Recorder Secretary said to Anthony-Petter that he was reading 26-COA-07 and not 26-COA-06.

Whitmer asked the reason they were only doing a small pad not the complete driveway. Anthony-Petter said that part of it was financial and that was how much they were able to install a portion, but what they are looking to do is over time replace more. Anthony-Petter continued to say that this was the area that has the most divots and collects the most water. The applicants will slowly be replacing the entire driveway as finances come forward, but for now they are looking to replace just what was the most immediate. Doug added that looking at the pictures, the spot they want to replace is the most beat up and used.

Zimmerman asked if they were looking into pour concrete over the gravel area and the commission needed to okay the removal of the gravel or the pouring of the concrete over the gravel just in that area. Anthony-Petter confirmed, yes.

Zimmerman said that he would accept a motion to approve 26-COA-06 234-236 Division Street in reference to the concrete pad, as presented. Motion made by Doug, seconded by Whitmer; motion carried with the following roll call vote:

Whitmer - Yes
Zimmerman – Yes
Mulvaney – Yes

DRAFT

Brunson – Yes

C. 26-COA-07: 234-236 Division Street – Sidewalk Replacement on the East side of the house

Anthony-Petter read Staff Report:

Description of proposed project:

1. To install a new 3ft by 23ft long sidewalk along the east side of the house to replace an existing 17in. wide sidewalk.

Recommendation
The Staff recommends **approval** of the request based on the following findings of fact:

1. The proposed sidewalk will be designed and installed like other sidewalks found throughout the district.
2. The proposed sidewalk will be a secondary path on the site and will be installed within the side yard.
3. The proposed sidewalk will match the existing and will not affect the historic integrity of the house.
4. It meets historic district guidelines for location, material, and configuration, and can be approved by staff.

Zimmerman asked Anthony-Petter if the sidewalk was going to be extended and widened. Anthony-Petter responded, yes, and explained that they are expanding it, but the length will be the same. Zimmerman said that the picture shows it will stop where and it will not proceed on to past that red line and asked if that was correct. Anthony-Petter responded that Zimmerman was correct and that the applicants were extending it to the sidewalk. Mulvaney added that it will just connect with the existing sidewalk and it will be the same size. Anthony-Petter explained that the applicant wanted to make it easier for them to take their trash to the sidewalks.

Zimmerman asked the commission members if there were any other questions for staff. There were no questions.

Zimmerman said that he would accept a motion to approve 26-COA-07 234-236 Division Street in reference to the sidewalk replacement, as presented. Motion made by Brunson, seconded by Whitmer; motion carried with the following roll call vote:

Whitmer - Yes
Zimmerman – Yes
Mulvaney – Yes
Brunson – Yes

D. 26-COA-08: 234-236 Division Street – Chimney Repair

Anthony-Petter read Staff Report:

Description of proposed project:

1. To repair existing chimney with matching brick and mortar joints.

Recommendation
The Staff recommends **approval** of the request based on the following findings of fact:

1. The proposed mortar repair will match the original mortar in strength, color and joint placement.
2. The proposed mortar repair will be minimally visible from the street.
3. It meets historic district guidelines for mortar replacement of strength, color and joint placement, and can be approved by staff.

Zimmerman asked if there was not going to be any increase in the height of the chimney. Anthony-Petter responded no. Zimmerman asked if there were not going to be any changes in the material and asked confirmation if it was replacement of the mortar joints and then the cap on the top of the chimney. Anthony-Petter confirms that what Zimmerman said is correct.

Whitmer pointed out that Anthony-Petter had one place in his analysis that indicated that it may be beneficial to use stronger mortar and asked if that was not happening. Anthony-Petter said that the applicants did not specify the mortar. Anthony-Petter explained the reason it was recommended is that it is in an area that because of environmental factors like wind and rain that having a slightly stronger mortar it may last longer. It might be able to help spread out the amount the time between making those repairs, but at the same time, with a harder mortar, you can run into if it is too hard, the brick might start to split off. That explains if you want to make sure that it is strong, but not too strong. Whitmer asked Anthony-Petter if he was still working with the homeowners on doing this and will he continue to work with the applicant with the strength issue. Anthony-Petter responded, yes. Zimmerman said that the applicants are also addressing the top of the chimney according to the photograph submitted with the application. Zimmerman said that it is bad on the top and asked if that was concrete opposed to mortar joint material and asked if the staff is recommending concrete on the top. Anthony-Petter said that staff would be recommending a concrete or some material that matches to what is there.

Zimmerman asked the commission members if they had any questions for staff. There were no questions.

Zimmerman said that he would accept a motion to approve 26-COA-08 234-236 Division Street in reference to the Chimney repair, as presented. Motion made by Mulvaney, seconded by Brunson; motion carried with the following roll call vote:

Whitmer - Yes
Zimmerman – Yes
Mulvaney – Yes
Brunson – Yes

Announcements:

DRAFT

Deb Parcell invited the commission members to attend a commission roundtable event that they were planning for all the commissions in the area. Parcell said that it is happening Monday October 5th at 6:00 pm in Nappanee at the Dietrich building. Parcell explained the location of the building right at the corner of 6 and 19, right downtown at the stoplight. The building is a two-story building right across from Benny's chocolate and across from the Main Street rosters and all the good places to eat. The roundtable would talk about how to find good, qualified commission members, have some discussion, and hear about everybody's successes and challenges. Parcell announced that they will be happy to see the members and particularly Ryan Dewiler, who knows Doug. Doug said that he did watch the meeting that morning but did not see Parcell. Parcell explained that Nappanee has a commission member, Ryan Deweiler, who is friends with Doug, and she had a meeting with them that same morning, which made this her second commission meeting. Parcell said that Gregor Smith, who is the city planner in Fort Wayne, will be talking about the challenges they had as a big city and it is not easy to seat a full commission and to find people that are reliable to show up and make good decisions.

Parcell invited the commission to their holiday open house in Fort Wayne, she did not remember the address, but she will send out an invite in December.

Zimmerman asked for the name of the building. Parcell responded Dietrich. Parcell will send the commission members a message with the information and added that the city of Nappanee just acquired that building recently. Parcell said that the previous owners were not doing anything with the building and it is such a major part of their downtown, the city hated to see it fall apart and they finally were able to get it from the owner. The building is in the process of transferring to a new owner that will develop it out, but right now the city is going to make some repairs to it before it transfers on. Parcell said that there may be one business on the first floor and then the second floor has just been the same for unknown time. Previously it was single rooms that people rented out and there is a big wide hallway. Every room has its own door, bedroom, kitchen, and a shared bathroom at the end of the hall. Every room even has a screen door on it for warm season and people could have the screen door open to get fresh air from the hall. After the meeting, the attendees can go upstairs, and see the original wallpaper upstairs, which could be fun.

Zimmerman said that for the record there would be a roundtable meeting on October 5th of 2026 and it is at 6:00 pm at the Dietrich building in Nappanee. Zimmerman asked if there were any other announcements.

Adjournment:

Zimmerman said that he would accept a motion to adjourn the meeting at 5:48 pm. Motion made by Brunson, seconded by Whitmer; motion approved 4-0.

Bill Zimmerman, Chair

DRAFT

Elkhart Historic & Cultural
Preservation Commission

ELKHART HISTORIC & CULTURAL PRESERVATION COMMISSION
REGULAR MEETING 2027 DATES

File by Date	Quarterly Meeting Date
Friday, January 7, 2027*	Thursday, January 21, 2027
Thursday, April 1, 2027	Thursday, April 15, 2027
Thursday, July 1, 2027	Thursday, July 15, 2027
Thursday, October 7, 2027	Thursday, October 21, 2027

ALTERNATE MEETING 2027 DATES AS NEEDED

File by Date	Meeting Date
Thursday, February 4, 2027	Thursday, February 18, 2027
Thursday, March 4, 2027	Thursday, March 18, 2027
Thursday, May 6, 2027	Thursday, May 20, 2027
Thursday, June 3, 2027	Thursday, June 17, 2027
Thursday, August 5, 2027	Thursday, August 19, 2027
Thursday, September 2, 2027	Thursday, September 16, 2027
Thursday, November 4, 2027	Thursday, November 18, 2027
Thursday, December 2, 2027	Thursday, December 16, 2027

Note: All meetings are held in the Council Chambers, 2nd floor, City Municipal Building at 6:00p.m., the 3rd Thursday of the month unless indicated or when no business is pending (*).

Reviewed and adopted by the City of Elkhart Historic and Cultural Preservation Commission at its regular meeting November 19, 2026.

_____

Bill Zimmerman, Chair

City of Elkhart
Municipal Building
229 South Second Street
Elkhart, Indiana 46516
574.294.5471 Ext. 1018

PETITION #: 26-COA-12 **FILING FEE: $** No Fee

PETITION to the HISTORIC COMMISSION

PETITION TYPE: CERTIFICATE OF APPROPRIATENESS

Property Owner(s): Legacy25 Inc. c/o RealAmerica

Mailing Address:

Phone #: [redacted] Email: [redacted]

Contact Person/Applicant: Amber Shamsaie

Mailing Address:

Phone #: [redacted] Email: [redacted]

Subject Property Address: 515 East Street, Elkhart, IN

Present Use: Multifamily apartments Proposed Use: Multifamily apartments

Description of Work:

Install an in-ground interpretive sign at the corner of the building near the interesction of East & Hug.

Sign is 24" x 36", cantilevered, installed with posts, and has been reviewed and approved by DNR.

NOTE: The petitioner is the legal property owner of record, or a certified representative, and agrees the above information is accurate. Failure to provide a legal signature or accurate information will make this application null and void.

PROPERTY OWNER(S) OR REPRESENTATIVE (PRINT): Michael Surak

SIGNATURE(S): DATE: 10/27/2026



Historic photograph of 515 East Street operating as the Winey Brothers Planing Mill. Courtesy of the Elkhart County Library.

WINEY BROS. MFG. CO.
SASH, DOORS, FRAMES, INTERIOR FINISH, STORE FIXTURES, ETC.
505-523 East Street. Phones Office 7, Mill 1110

Winey Brothers Planing Mill advertisement from the 1912 Elkhart City Directory, published by R.L. Polk & Company, Detroit, Michigan.



515 East Street in 2024 before redevelopment, shown from a similar vantage point as the historic photograph above.

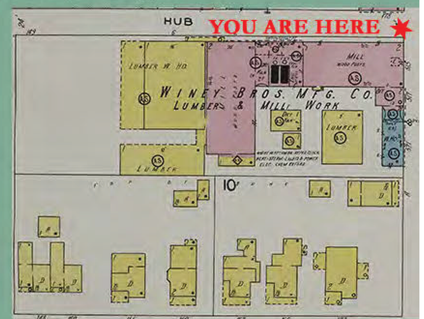

Portion of the 1927 Sanborn Fire Insura Map for Elkhart. Courtesy of Indi University, Bloomington.

Cultural Resource Analysts #141614 - (1) 36" W x 24" H x .090 Fiberglass-Embedded (FE) Panel. Red dotted line indicates visual area of frame.

Proposed location of Interpretive Sign at 515 East Street

Sign will be installed in-ground with posts in the landscape bed notated with a star.







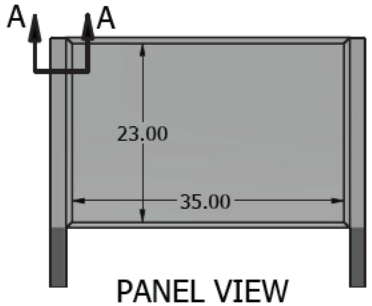

PANEL VIEW
SCALE 1/16

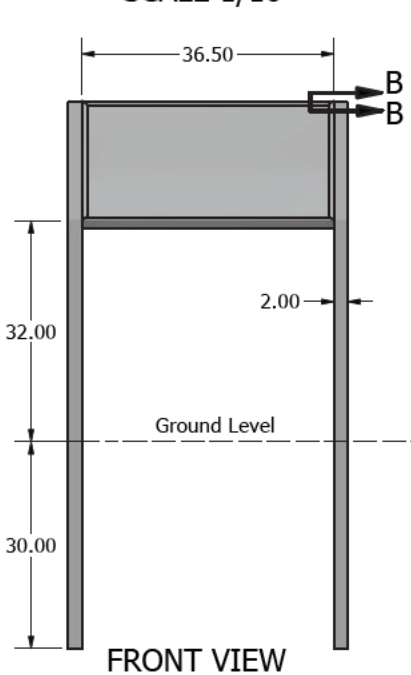

FRONT VIEW
SCALE 1/18

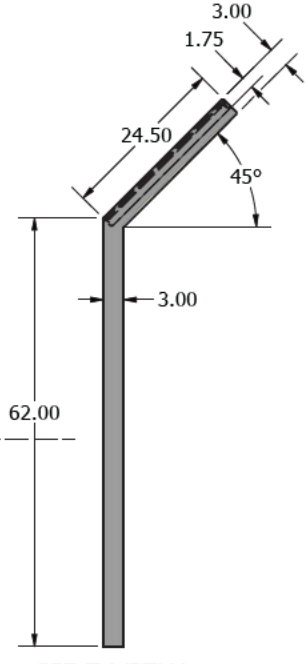

SIDE VIEW
SCALE 1/18

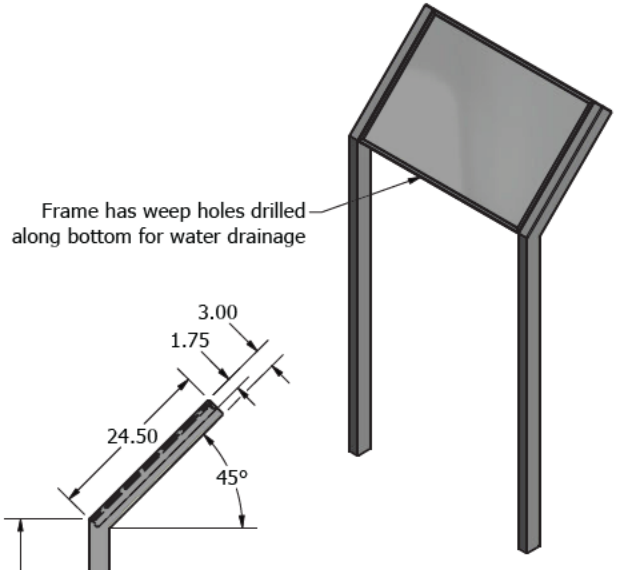

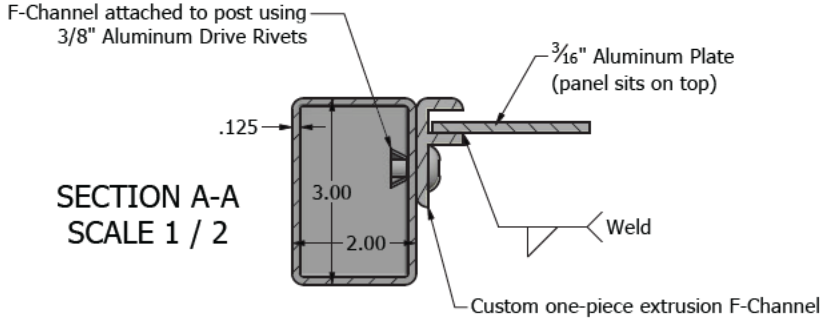

SECTION A-A
SCALE 1 / 2

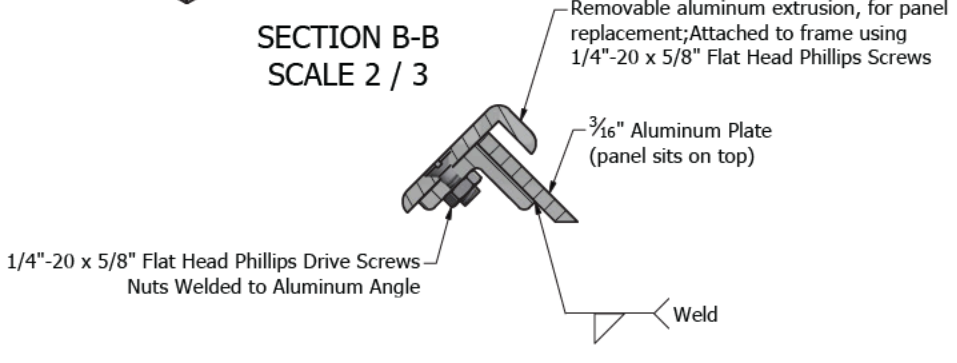

SECTION B-B
SCALE 2 / 3

HARDWARE INCLUDED		
Type	QTY	Image
3/8" Aluminum Drive Rivets	6 each	
1/4"-20 x 5/8" Flat Head Phillips Screws	3 each	

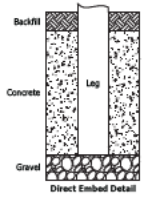

Cantilevered Exhibit Base
Cultural resources Analyst

Frame Size:	36.5"w x 24.5"h
Trim Size:	35.875"w x 23.875"h
Visual Area:	35"w x 23"h
Frame Color:	Black
Finish:	Powder Coated Textured

* Post holes should be dug below the frost line depth. Pannier recommends height from ground to bottom of frame to be 32".

CUSTOMER SIGNATURE

Job # 141615
Qty: 1
Date: 8/19/2026
Rev. #: 0
Drawn By: CJG

Pannier
345 Oak Road
Gibsonia, PA 15044
Phone: 724.265.4900
Fax: 724.265.4300
www.PannierGraphics.com

DNR Indiana Department of Natural Resources

Mike Braun, Governor
Alan Morrison, Director

Division of Historic Preservation & Archaeology·402 W. Washington Street, W274·Indianapolis, IN 46204-2739
Phone 317-232-1646·Fax 317-232-0693·dhpa@dnr.IN.gov

August 5, 2026

Alyssa Reynolds
Architectural Historian
CRA, Inc.
201 NW 4th Street, Suite 204
Evansville, Indiana 47708

State Agency: Indiana Housing & Community Development Authority

Re: Draft interpretive signage pertaining to the certificate of approval for the demolition of 515 East Street and construction of a 60-unit affordable housing apartment complex using Development Funds from the Indiana Housing and Community Development Authority (DHPA #30219)

Dear Ms. Reynolds:

Pursuant to Indiana Code 14-21-1-18 and Condition 2 of the January 25, 2024, certificate of approval that was granted by the Indiana Historic Preservation Review Board ("Review Board") to the Indiana Housing and Community Development Authority to demolish the building at 515 East Street within the State Street-Division Street Historic District ("COA") in Elkhart, Elkhart County, Indiana, the Indiana Department of Natural Resources, Division of Historic Preservation & Archaeology has conducted a review of the draft interpretive signage received on July 20, 2026, with revised materials provided on July 28, 2026.

Thank you for providing us the proposed design of the interpretive panel and the graphic showing its proposed location in satisfaction of Condition 2 of the COA. We appreciate the revisions made to the draft in response to our July 28, 2026, email. As noted in our email, one additional minor correction is to condense the spacing between the words in the lower left-hand caption. As this is a very minor correction, we believe the content and design of the sign is acceptable and approve of the draft interpretive panel design as submitted.

If you have any further questions about our comments, please contact the DHPA. Questions about archaeological issues should be directed to Melody Pope at (317) 234-5254 or mpope@dnr.IN.gov. Questions about historic buildings or structures pertaining to this project should be directed to Caitlin Lehman at (317) 232-0461 or clehman1@dnr.IN.gov. Additionally, in all future correspondence regarding the above indicated project, please refer to DHPA #30219.

Very truly yours,

Beth K. McCord
Director, Division of Historic Preservation & Archaeology

BKM:CML:cml

emc: Ashlynn Morelock, IHCDA
Michael Surak, Real America LLC
Alyssa Reynolds, CRA, Inc.
Lisa Kelley, CRA, Inc.

Staff Report

Planning & Zoning

Petition: 26-COA-12

Petition Type: Board Item

Date: November 19, 2026

Petitioner: 515 East, LP

Site Location: 515 East Street

Local Landmark or District: State & Division Street Local and National Register Historic Districts

Rating: Non-Contributing

Date Constructed: 2024-2026

Description of proposed project:

1. Install an in-ground 24" x 36" interpretive panel at the corner of the building near the intersection of East and Hug Street.

Applicable Guidelines:

Commercial Standards: Signs: Add a New Sign to Replace a sign or where no signage exists.

- The proposed color, graphics, and scale is compatible with the district and its character;
- Signage should not cover nor remove elements of the building that give it its character.
- Signs designed in the same period as the building's construction are recommended – allowing the use of modern materials for their fabrication.
- New signs should be installed with anchoring that does not destroy or cause removal of historic materials.

Applicable Sections of the Zoning Ordinance:

Section 12.6 of Ordinance 4041 of the City of Elkhart requires a Certificate of Appropriateness to be issued for a conspicuous change in the exterior appearance of the existing building by demolitions, moving, additions, new construction, alteration, color change or maintenance of existing buildings, including windows, doors and all exterior features, walls or fences. As such, a Certificate of Appropriateness must be issued for the work proposed at 515 East Street.



Staff Analysis

The petitioner is requesting to install an in-ground 24" x 36" interpretive panel at the corner of the building near the intersection of East and Hug Street. This request is a part of the overall mitigation process for using Development Funds from the Indiana Housing and Community Development Authority to help fund the project.

This petition is part of a larger request in completing the residential building project which came in front of the commission in 2024 as 24-COA-01. This request is not the typical sign request as the sign panel is used to provide information about the history of the site and will not promote or advertise the property like a usual sign. As a part of the approval this will include the location and the information on the interpretive panel.

The petitioner recently reached out staff to talk about requirement for signage for this property and was made aware of the need for approval from the Commission before permitting.

The proposed sign area will be situated near the front door at the corner of the building near the intersection of East Street and Hug Street. This request for the property reflects the petitioners working to complete the final steps for the project as a part of the final approval for the project. Approval from the Indiana Department of Natural Resources (DNR) has already been given, making local approval the final step in the process for the sign. With this building being new construction, the typical worry of damaging historic material is not a concern.

Recommendation

The Staff recommends **approval** of the request based on the following findings of fact:

1. The proposed sign will not cover nor remove elements of the building that give it its character;

2. The proposed sign will be installed into the ground and will not destroy or cause removal of historic materials;

3. The proposed color, graphics, and scale is compatible with the district and its character;

Photos





515 East Street, August 13, 2026

Attachments

Petition, appeal letter, affidavit, and site plan.

PETITION #: 26-COA-11 **FILING FEE: $** No Fee

PETITION to the HISTORIC COMMISSION

PETITION TYPE: CERTIFICATE OF APPROPRIATENESS

Property Owner(s): The Ruthmere Foundation, Inc

Mailing Address: 302 E Beardsley Ave Elkhart, IN 46514

Phone #: [redacted] Email: [redacted]

Contact Person/Applicant: Jennifer Johns

Mailing Address: [redacted]

Phone #: [redacted] Email: [redacted]

Subject Property Address: 102 W Beardsley Ave Elkhart, IN 46514

Present Use: Historic house museum Proposed Use: Historic house museum

Description of Work: We want to install historic looking arched wooden window trellises around the windows on the west and east end additions on the front of the house. We intend to plant clematis on them with sedum and hydrangeas on either side (see historic photograph and drawings of proposed trellis and plantings. The trellises will be painted the same color as the exterior brick.

NOTE: The petitioner is the legal property owner of record, or a certified representative, and agrees the above information is accurate. Failure to provide a legal signature or accurate information will make this application null and void.

PROPERTY OWNER(S) OR REPRESENTATIVE (PRINT): Jennifer Johns, Curator

SIGNATURE(S): Jennifer Johns DATE: 10/21/2026





City of Elkhart

Staff Report

Planning & Zoning

Petition: 26-COA-11

Petition Type: Staff Item

Date: November 12, 2026

Petitioner: The Ruthmere Foundation, Inc

Site Location: 102 West Beardsley Avenue

Local Landmark or District: Local Landmark and National Register Historic District

Rating: Outstanding

Date Constructed: 1848

Description of proposed project:

1. Install arched wooden window trellises around the windows on the west and east end additions of the front of the house.

Applicable Guidelines:

Residential Standards: Site projects-garages, landscaping, parking areas, decks, driveway, sidewalks and paths: Install a new landscaping plan.

• When developing a new landscaping plan for a site, mature trees and perennials should be preserved and incorporated into the new plan.

Applicable Sections of the Zoning Ordinance:

Section 12.6 of Ordinance 4041 of the City of Elkhart requires a Certificate of Appropriateness to be issued for a conspicuous change in the exterior appearance of the existing building by demolitions, moving, additions, new construction, alteration, color change or maintenance of existing buildings, including windows, doors and all exterior features, walls or fences. As such, a Certificate of Appropriateness must be issued for the work proposed at 102 West Beardsley Avenue.



Staff Analysis

The petitioner is requesting to install four arched wooden trellises around the windows on the west and east end additions of the front of the house. They intend to plant clematis on them with sedum and hydrangeas on either side and will paint the trellises the same color as the exterior brick.

The request is to recreate historic trellises originally located on the front of the house based on a historic photo provide by the petitioner. The request is seen as an update to the landscaping plan of the site, as this is the closest to what is listed in the guidelines as a similar example.

The guidelines allow staff to approve landscaping plans for residential properties, when plans preserve the mature landscaping while adding to new cohesive plan that compliments the historic building and site. The adding of the trellises around the windows will add to the landscaping of the site.

The proposed work will not damage the historic building material as the feet of the poles uses to hold the trellises up will rest on the ground and any attachment to the house will be limited.

Because the installation of the trellises will not change the look of the house, staff determined that this work to be inside of staff's scope for staff approval as this was seen as adding to the landscaping and not as a change to the exterior of the house.

Photographic evidence exists that four arched trellises around the windows on the front of the house existed likely around the early 1900s. The historic image of the house, confirm location of the trellises around the windows matching the location to be placed. The new trellises will match to the extent possible for the design, shape and coverings evidenced in historic image.

Recommendation

The Staff recommends **approval** of the request based on the following findings of fact:

1. The proposed trellises will preserve the landscaping while complimenting the historic building and site;
2. The proposed trellises does not cover up elements of the building that give it its architectural character.
3. The proposed trellises will match the design, shape and coverings evidenced in the historic image;
4. The proposed trellises installation will be done in a way to not remove or damage to original materials as installation will be done using poles and limited attachment to the house;

Photos



102 West Beardsley Avenue Google Maps, August 2025

Attachments

Petition, appeal letter, affidavit, and site plan.

Secretary of the Interior's Standards

Elkhart HPC

November 19, 2026

4 approaches

- **Preservation** – retaining
- **Rehabilitation** – new use, addition, alteration
- **Restoration** – house museum, period of significance
- **Reconstruction** – recreating lost or missing feature/building





Preservation

Preservation

- retaining the building as it currently exists
- original historic materials/features and later changes/additions will be preserved
- goal is retention of the building's existing form, features, and materials
- maintaining existing materials and features or may involve more extensive repair
- Protection, maintenance, and repair are emphasized while replacement is minimized.

When to Choose Preservation:

- when the property's distinctive materials and features are basically intact
- when depiction at a particular period of time is not appropriate
- when the use does not require additions or extensive alterations

- Prior to undertaking work, a documentation plan for Preservation should be developed.


218
218½
OPEN

Materials:

- Retain, clean, and repair all existing materials
- Repaint with colors that are appropriate to the building or district
- Retain/repair historic windows. Add storm windows for additional protection.
- *Limited replacement in kind of extensively deteriorated features* (materials, as well as features such as porches and storefronts). The new work should match the old in material, design, scale, color, and finish.



Rehabilitation




579



Rehabilitation

- making a compatible use for a property through repair, alterations, and additions
- preserve those features which convey its historical, cultural, or architectural values.

When to Choose Rehabilitation:

- when repair and replacement of deteriorated features are necessary
- when alterations or additions to the property are planned for a new or continued use
- when its depiction at a particular time is not appropriate

Prior to undertaking work, a documentation plan for Rehabilitation should be developed.

Standards for Rehabilitation

1. Minimal change
2. Don’t remove character-defining features
3. Don’t erase the time/sense/place, creating a false sense of place
4. Acquired history over time attain their own significance
5. Preserve distinctive features
6. Repair deteriorated, if it must be replaced, match materials
7. Cleaning with the gentlest process possible
8. Archaeological resources – preserve in place
9. New – different but compatible scale, massing, differentiated, sympathetic, subordinate, similar materials
10. Reversibility

Materials:

- Repaint historically-painted features with colors that are appropriate to the historic character of the building and district.
- Repair features that can be stabilized and repaired
- Replace features only when too deteriorated to repair
- Designing and installing a replacement when the historic feature is completely missing. It may be an accurate restoration based on documentary and physical evidence, or it may be a new design that is compatible with the size, scale, material, and color of the historic building.
- Retain and repair windows from the restoration period
- Rooftop additions, green roofs, mechanical equipment, etc. should be installed on the roof so they are minimally visible from the public right-of-way.



Restoration


LYRIC
FAVORITE PLAYERS
SUPERIOR
FURNITURE

Restoration:

- accurately depicting the form, features, and character of a property as it appeared at a particular period of time
- removal of features from other periods in its history
- reconstruction of missing features from the restoration period
- limited and sensitive upgrading of mechanical, electrical, and plumbing systems and other code-required work to make building functional

When to choose Restoration:

- when the property's design, architectural, or historical significance during a particular period of time outweighs the loss of existing materials and features that characterize other historical periods
- when there is substantial physical and documentary evidence;
- when contemporary alterations and additions are not planned Restoration may be considered as a treatment.

Prior to undertaking work, a particular period of time, i.e., the restoration period, should be selected and justified, and a documentation plan for Restoration developed.

Materials:

- Choose paint colors documented to the restoration period
- Repair features that can be stabilized and repaired
- Replace features only when too deteriorated to repair, using physical evidence or historic documentation
- Document features from other periods prior to removal
- Retain and repair windows from the restoration period
- Repair with materials similar to original; if not feasible, compatible substitute replacement material can be considered



Reconstruction

Reconstruction:

- depicting, by means of new construction, the form, features, and detailing of a non-surviving site, landscape, building, structure, or object for the purpose of replicating its appearance at a specific period of time and in its historic location.



When to choose Reconstruction:

- When a contemporary depiction is required to understand and interpret a property's historic value
- when no other property with the same associative value has survived
- when sufficient historical documentation exists to ensure an accurate reproduction

Prior to undertaking work, a documentation plan for Reconstruction should be developed.

Materials:

- original building materials (such as masonry, wood, and architectural metals) is preferable
- substitute materials may be used as long as they recreate the historic appearance
- recreate the documented design of exterior features, such as the roof form and its coverings, architectural detailing, windows, entrances and porches, steps and doors, and their historic spatial relationships and proportions.
- reproduce the appearance of historic paint colors and finishes based on documentary and physical evidence
- install exterior electrical and telephone cables underground or in the least obtrusive location possible, unless they can be documented as having been aboveground historically

Which approach would you choose?














DETOUR
EAST
11TH ST

